ARP670

Rugged Portable Chassis

Features

- Rugged Aluminum Construction with shock absorbing rubber corners
- 17" LCD display with tempered glass, 1280x 1024 16.7M, 300 nits brightness, MTBF: 50,000 hrs
- Designed for Standard ATX M/B/ SBC with Backplane
- Offer 7/ 10 full length slots expansion capability
- Industrial multi-languages keyboard with touchpad
- PS2 650W power supply, 100~240VAC
- Offer 2x 5.25", 1x slim DVD-RW, 1x 3.5" drive bays
- Carrying case to manage portable PC with ease

Specification

Model No	ARP670	ARP670-S
Motherboard	Support ATX M/B	Support SBC with PBP
Slots	Offer 7 expansion slots	Offer 10 expansion slots
Drive bay	2x 5.25", 1x slim DVD-RW, 1x 3.5"	
Display	17" LCD Display, 1280x 1024, 300 nits brightness 16.7M colors, 800:1, MTBF:50,000 hurs Anti-reflection tempered strengthen glass	
VGA	AD conversion board, DVI interface (Option VGA)	
KB/MS	104-key Industrial multi-language Keyboard/ touchpad	
Power Supply	PS2, 650W, 100~240VAC, Auto switch	
Construction	Rugged Aluminum Construction with rubber corners	
Speaker	Built-in amplified 2x 3W speakers	
Dimension	433Wx 372Hx 227D mm	
Weight	12 kgs	
Carrying Case	Padded carrying case with wheels	

Environmental Factors

	Operating	Non-Operating
Temperature	0°C~50°C	-20°C~60°C
Relative Humidity	10%~90%	10%~95%
Shock	10g, 11ms, half-Sine	30g, 11ms, half-Sine
Vibration	10-500Hz (0.4 Grms)	10-500Hz (1.12 Grms)
Approval	CE, FCC, RoHS	

Ordering Information

ARP670-17USA
17" LCD, 7 slots for ATX MB, 2B, 1S, 1slim, VGA, Carrying case
ARP670-17USB
17" LCD, 7 slots for ATX MB, 1B, 2S, 1slim, VGA, Carrying case
ARP670-17USAD
17" LCD, 7 slots for ATX MB, 2B, 1S, 1slim, DVI, Carrying case
ARP670-17USBD
17" LCD, 7 slots for ATX MB, 1B, 2S, 1slim, DVI, Carrying case
ARP670-S17USA
17" LCD, 10 slots for SBC+PBP, 2B, 1S, 1slim, VGA, Carrying case
ARP670-S17USB
17" LCD, 10 slots for SBC+PBP, 1B, 2S, 1slim, VGA, Carrying case
ARP670-S17USAD
17" LCD, 10 slots for SBC+PBP, 2B, 1S, 1slim, DVI, Carrying case
ARP670-S17USBD
17" LCD, 10 slots for SBC+PBP, 1B, 2S, 1slim, DVI, Carrying case
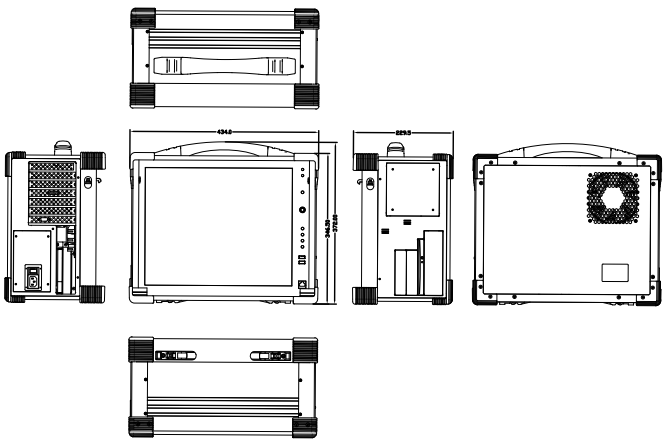
Note: Drive bay: B: 5.25", S: 3.5"
Keyboard layout: CH, FR, GR, KR, RU, SP, UK, US